Trial environment setup

Exchange Server Archiver - 1.1

redgate®
ingeniously simple tools

Introduction

This document describes how you can set up a trial environment for using Exchange Server Archiver with Exchange Server 2007.

You do not have to use this particular setup for your evaluation; Exchange Server Archiver can be deployed into a wide number of Exchange Server configurations, and you can set up a trial on the configuration that is most convenient for you (for full details of the supported software, see Prerequisites (http://www.red-gate.com/ESA/1.1?i=9436)).

However, the environment described here is designed to get you up and running with Exchange Server Archiver as quickly as possible, using the fewest number of computers.

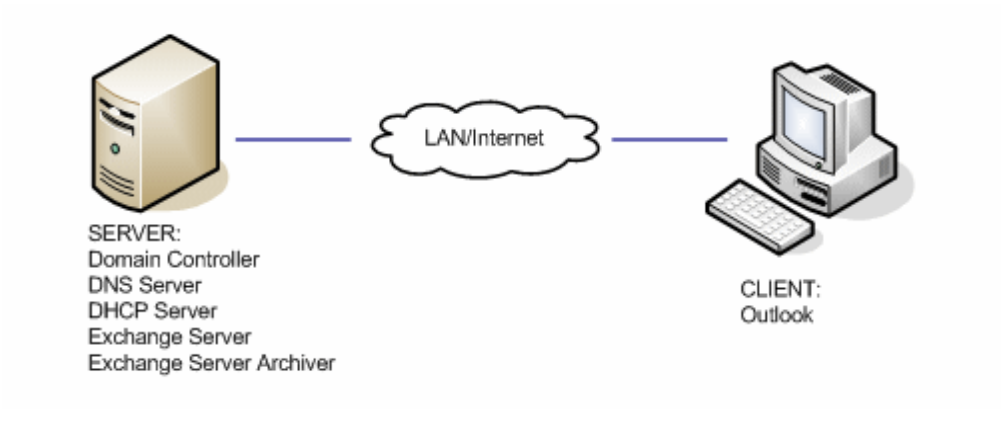

The easiest way to do this is to use virtualization technology such as VMWare® Server, Microsoft® Virtual Server, or Microsoft Hyper-V™. However, you could use physical computers if you prefer.

Before you set up a trial environment, you are recommended to read the Exchange Server Archiver Technical Overview (http://www.red-gate.com/ESA/Overview/v1.1) for a description of the architecture and an explanation of how Exchange Server Archiver archives and retrieves messages.

Requirements

Below are the requirements for this trial configuration. For details of the general requirements for Exchange Server Archiver, see Prerequisites (http://www.red-gate.com/ESA/1.1?i=9436).

- 32-bit Windows 2003 Server SP2 (SERVER), 1.5 GB RAM, 50 GB of hard disk space
- 32-bit Windows XP SP3 (CLIENT), 512 MB RAM, 10 GB of hard disk space

Both computers should have a network connection and be on the same subnet.

The domain controller will run a DHCP server, therefore you are recommended to use a network that is dedicated to this system, such as the *Host only* networks in VMWare, or a Loopback adaptor if you are using Virtual Server.

Software:

- Microsoft Windows® 2003 Server installation CD
- Microsoft Exchange Server 2007 SP1 installation CD
- Microsoft Outlook® 2007 installation CD
- Red Gate Exchanger Server Archiver installer, available from the Red Gate Web site (http://www.red-gate.com/products/Exchange/index.htm)
- Installers for the following, all available from the Microsoft Web site (http://www.microsoft.com)
  - Windows Installer 3.0
  - Microsoft .NET 2.0 with SP1
  - Messaging API and Collaboration Data Objects (http://www.microsoft.com/downloads/details.aspx?FamilyID=94274318-27c4-4d8d-9bc5-3e6484286b1f)
  - Windows PowerShell
  - December 2007 cumulative time zone update for Microsoft Windows operating systems (http://go.microsoft.com/fwlink/?linkid=92858)

Configure the server

The server will be the Active Directory Domain Controller, DNS Server, DHCP Server, Exchange 2007 Server, and Exchange Server Archiver server for the trial environment.

1. Install the prerequisites

Before you install the Windows roles, Exchange 2007, and Exchange Server Archiver, some prerequisites must be installed.

1. Log in to the computer as an administrator.
2. Place the Windows 2003 Installation disk into the CD drive of the server.
3. In the Control Panel, navigate to Add/Remove Programs and click **Add/Remove Windows Components**.
4. When the Windows Components Wizard is displayed, double-click **Application Server**.
5. Select the following components and then click **OK**:
   - ASP.NET
   - Internet Information Services (IIS)
6. Click **Next**.
7. Ensure that Windows Installer 3.0 or later is installed.

   If you need to install Windows Installer, you will be required to restart your system before you continue.
8. Install .NET 2.0 SP1
9. Install Messaging API and Collaboration Data Objects.
10. Install Windows PowerShell.

2. Configure the Indexing Service

Exchange Server Archiver requires that the Windows Indexing Service is running so that the Storage Service can search archived messages.

1. In Administrative Tools, select **Services**.
2. Right-click the Indexing Service and select **Properties**.
3. Change the **Startup type** to *Automatic*.
4. Click **Apply**.
5. Click **Start**.
6. Click **OK**, and then close **Services**.

3. Install the required Windows roles

When you have installed the prerequisite components, you can install the necessary Windows roles required to run a domain.

1. Open the **Manage Your Server** application.
2. Click the **Add or Remove a role** link.
3. When the Configure Your Server Wizard is displayed, on the Preliminary Steps page, click **Next**.
4. Select **Typical Configuration** and then click **Next**.

   This will install the Active Directory Domain Controller, DNS and DHCP roles required.
5. Enter the full **Active Directory domain name** for your environment, such as *example.com*, and then click **Next**.

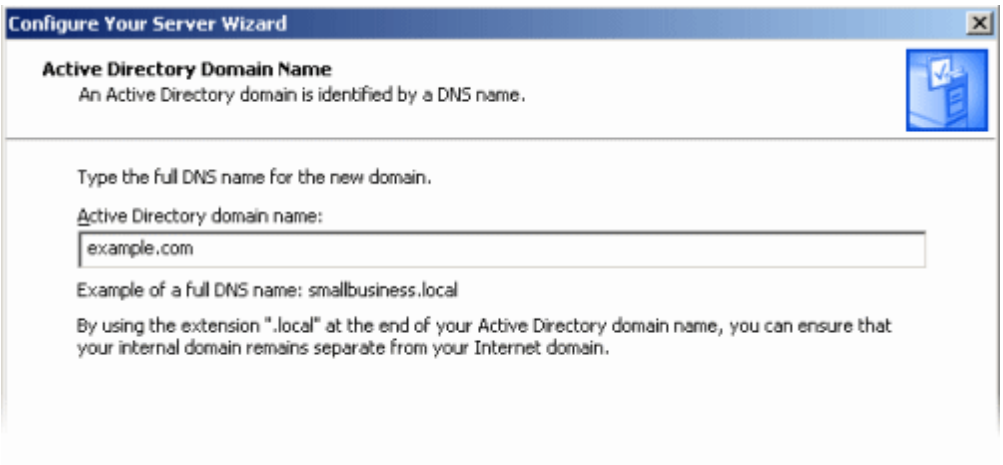

6. Leave the **NETBIOS** settings as they are, and click **Next**.
7. On the **Summary of Selections** page, click **Next** to install the roles.
8. Accept any prompts to restart the system; when you log in again, the configuration continues.
9. When the Server Configuration Process is complete, click **Next**.

4. Configure the Windows roles

The Windows roles must be configured so that services and client computers can communicate.

Configure the DHCP role:

1. In Administrative Tools, select **DHCP**.
2. Ensure that the DHCP server is authorized by right-clicking the domain name; if **Authorize** is displayed in the menu, select this option; if **Unauthorize** is displayed, the DHCP server is already authorized and you do not need to take any action.
3. Expand the local domain, right-click **Server Options**, and then click **Configure Options**.

4. Select the **003 Router** option and enter the IP addresses for your network's Router (also known as the default gateway).
5. Close **DHCP**.

Configure the DNS role:

1. In Administrative Tools, select **DNS**.
2. Right-click the server name and click **Properties**.
3. Select **Forwarders**, and enter the IP addresses of your network's DNS servers.
4. Click **OK** and close **DNS**.

Configure the Active Directory role:

1. In Administrative Tools, select **Active Directory Domains and Trusts**.
2. Right-click the Active Directory domain for your environment and click **Raise Domain Functional Level**.
3. From the drop-down list, select *Windows Server 2003*.

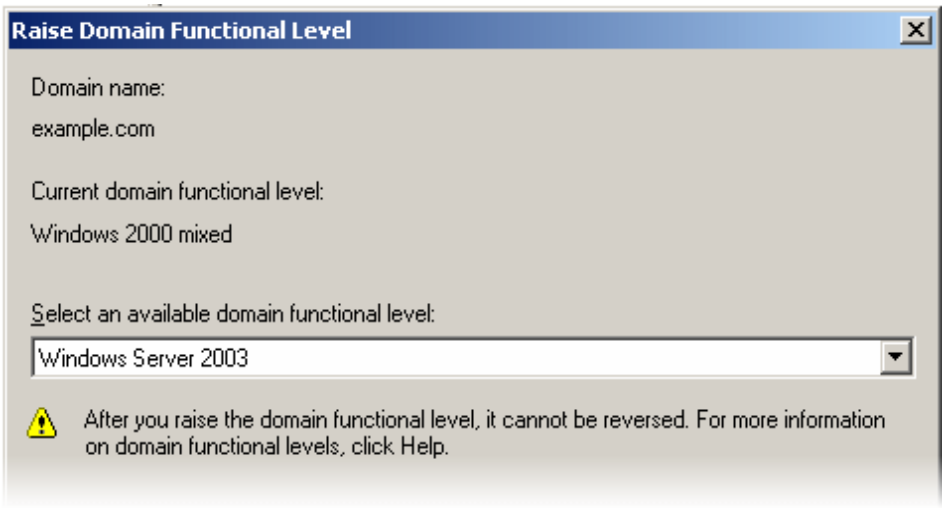

4. Click **Raise**, and agree to the confirmation message.
5. Close Active Directory Domains and Trusts.

5. Install Exchange Server 2007 SP1

When you have set up a working domain, you can install Exchange Server.

1. Place the Exchange Server 2007 SP1 installation disk into the CD-ROM drive of the server, and run *setup.exe* in the CD-ROM's root directory.

2. When the options page is displayed, ensure that Steps 1-3 are disabled; if they are not, you have not installed one of the prerequisites.

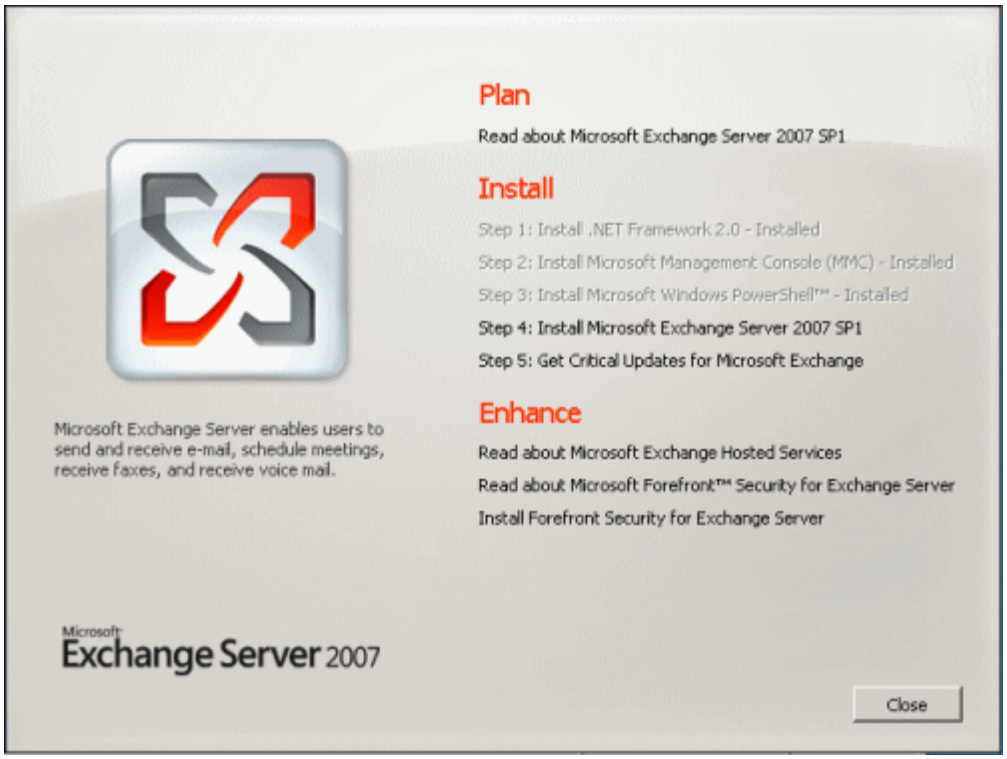

3. Click **Step 4: Install Microsoft Exchange Server 2007 SP1**.
4. When the Exchange Server 2007 SP1 Setup wizard launches, click **Next** on the first page.
5. Accept the License Agreement, and select the Error Reporting option you require.
6. Select **Typical Exchange Server Installation** and click **Next**.
7. Enter the name of your Exchange Organization, and click **Next**.
8. Select *Yes* to support for Outlook 2003 and Entourage, and then click **Next**.
9. Wait for the readiness checks to complete, ignore any warnings about using evaluation versions of Exchange Server, and then click **Next**.
10. Exchange Server 2007 SP1 will now be installed; when it completes the process, click **Finish** and restart the system.
11. When the system has rebooted, run *setup.exe* in the CD-ROM's root directory again.
12. When the options page is displayed, click **Step 5: Get Critical Updates for Microsoft Exchange**.
13. Follow the on-screen prompts to install any necessary updates.

6. Create users and mailboxes

You can now create the mailbox for the administrator user, and create two other users with mailboxes: *esauser* is required by Exchange Server Archiver; *testuser* is a user that you can use to send test e-mail messages and archive them.

1. Start the **Exchange Management Console**.
2. Navigate to **Microsoft Exchange**, **Recipient Configuration**, **Mailbox**.
3. In the Actions area, click **New Mailbox**.
4. In the New Mailbox wizard, choose to create a **User Mailbox**, and then click **Next**.
   a. Select **Create a Mailbox for a New user** and click **Next**.
   b. Enter *esauser* as both the **Name** and **User Logon** name (User Principal Name), complete the password fields, and then click **Next**.

      This creates the user that Exchange Server Archiver will use to communicate with Microsoft Exchange Server.

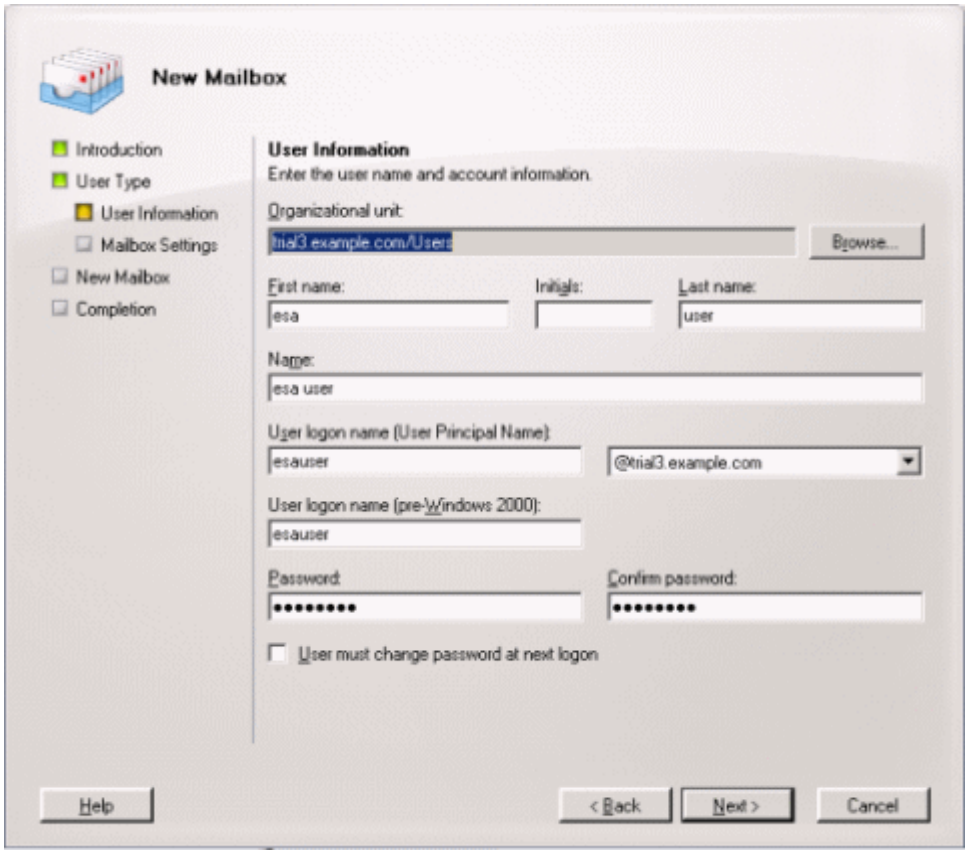

   c. Click **Browse**, select a mailbox database for the user, click **OK**, and then click **Next**.
   d. Review the summary configuration, click **New**, and when the user is created, click **Finish**.
5. Repeat steps 1 to 4 above, specifying *testuser* as both the **Name** and **User Logon name** (User Principal Name).

This will be a test user whose mailbox will be archived.

6. Repeat steps 2 and 3 above, and then:
   a. Choose to create a mailbox for an **Existing user**.
   b. Click **Add**.
   c. Select **Administrator** and click **OK**.
   d. Click **Browse**, select a mailbox database for Administrator, click **OK**, and then click **Next**.
   e. Review the summary configuration, click **New**, and when the Administrator's mailbox is created click **Finish**.

7. Grant permissions to the ESA user

The Exchange Server Archiver Archive Service user must be a mailbox-enabled user in Exchange Server, and must have domain administrator rights and full access to the mailboxes on the Exchange server.

1. In Administrative Tools, select **Active Directory Users and Computers**.
2. In the Users directory, right-click the **Domain Admins** group, and then click **Properties**.
3. Select the **Members** tab and click **Add**.
4. Enter *esauser* and click **OK**.

   esauser will be added to the list of members of the Domain Admins group.
5. Click **OK**, and then close **Active Directory Users and Computers**.
6. Start the Exchange Management Shell and run the following command to grant full rights to *esauser* over mailboxes on the Exchange Server:

```
foreach ($sg in Get-StorageGroup) { if ((Get-ExchangeServer
    $sg.Server).Domain.Equals("trial3.example.com"))
    { get-mailboxdatabase -storagegroup $sg.Identity |
    add-adpermission -user esauser -accessrights GenericAll; } }
    GenericAll}
```

Configure the client computer

It is not recommended to install Outlook on the same computer as Exchange Server. Therefore, you should configure a second computer to act as client in your test environment.

1. Install Windows XP and Service Pack 3.
2. Check that you have a network connection to the server by pinging it.
3. In the Control Panel, select **System**, select the **Computer Name** tab, and click **Change**.
4. In the Computer Names Changes dialog box, for **Computer name** enter *CLIENT*, for **Member of Domain** select *example.com*, and then click **OK**.
5. When prompted, enter the domain's administrator username and password.
6. At the *Welcome to the example.com Domain* prompt, click **OK**.
7. At the *You must restart this computer for the changes to take effect* prompt, click **OK**.
8. In the **System Properties** dialog box, click **OK**, and then click **Yes** when you are asked whether you wish to restart your computer.
9. When the computer has restarted, log in as *example\administrator* and install Outlook 2007 SP1.

Set up the Outlook accounts

You can now set up Outlook for the users:

1. Start Outlook, and configure the necessary details for the administrator to send e-mail.
2. Send a test e-mail message to *esauser@example.com* and *testuser@example.com*.

   This creates their mailboxes in Exchange Server.
3. Log out and log back in again as *esauser*, start Outlook and set up the Outlook settings account for *esauser*.
4. Check that *esauser* has received the email from *administrator@example.com*.
5. On the **Tools** menu, click **Account Settings**, select the *esauser@example.com* account and click **Change**.
6. Click **More Settings**.
7. Click **Advanced**.
8. Select the **Advanced** tab and click **Add**.
9. Enter *testuser* as the mailbox, and click **OK**.
10. Close the open dialog boxes, accepting all changes made.

esauser should now be able to view *testuser*'s mailbox and see the test e-mail message sent from *administrator*.

The trial environment is now ready for Exchange Server Archiver to be installed. For details, see Installing Exchange Server Archiver (http://www.red-gate.com/esa/installation/v1.1).